FläktGroup

SEMCO

TUNNEL & METRO SOLUTIONS

» SPECIALIST SYSTEMS WITH OVER 100 YEARS OF EXPERIENCE

SAFETY AND PERFORMANCE FOR ALL TUNNEL APPLICATIONS

FläktGroup® is a global leader within air technology solutions, and we at FläktGroup SEMCO® are proud to serve as the North American division of a company who is renowned for delivering products and solutions to thousands of projects all over the world with focus on indoor air & critical air solutions.

Our solutions comprise innovative, well proven and integrated products with the goal to always provide the best comfort, and safety in the most energy efficient way to provide our customers with the optimal life cycle cost, regardless of geographical location.

Leading enterprises and public entities use our solutions to protect and enhance the physical environment for people and valuable property, reputation and customer relationships, providing competitive advantage and financial success.

We enable organizations to be more flexible and agile, increase trust and operate more confidently. Enabling enterprises to manage their business risks, optimize operations and comply with regulatory obligations is part of our business promise.

We are perfectly positioned to help our clients meet the challenges of operating in the corporate world. Today, we have over 3,600 staff with presence in 65 countries serving clients across Europe, the Americas, Asia Pacific, the Middle East and Africa. We have a strong heritage in protecting assets, applying our technology innovation and track-record of complex solutions integration to solve clients' critical business issues.

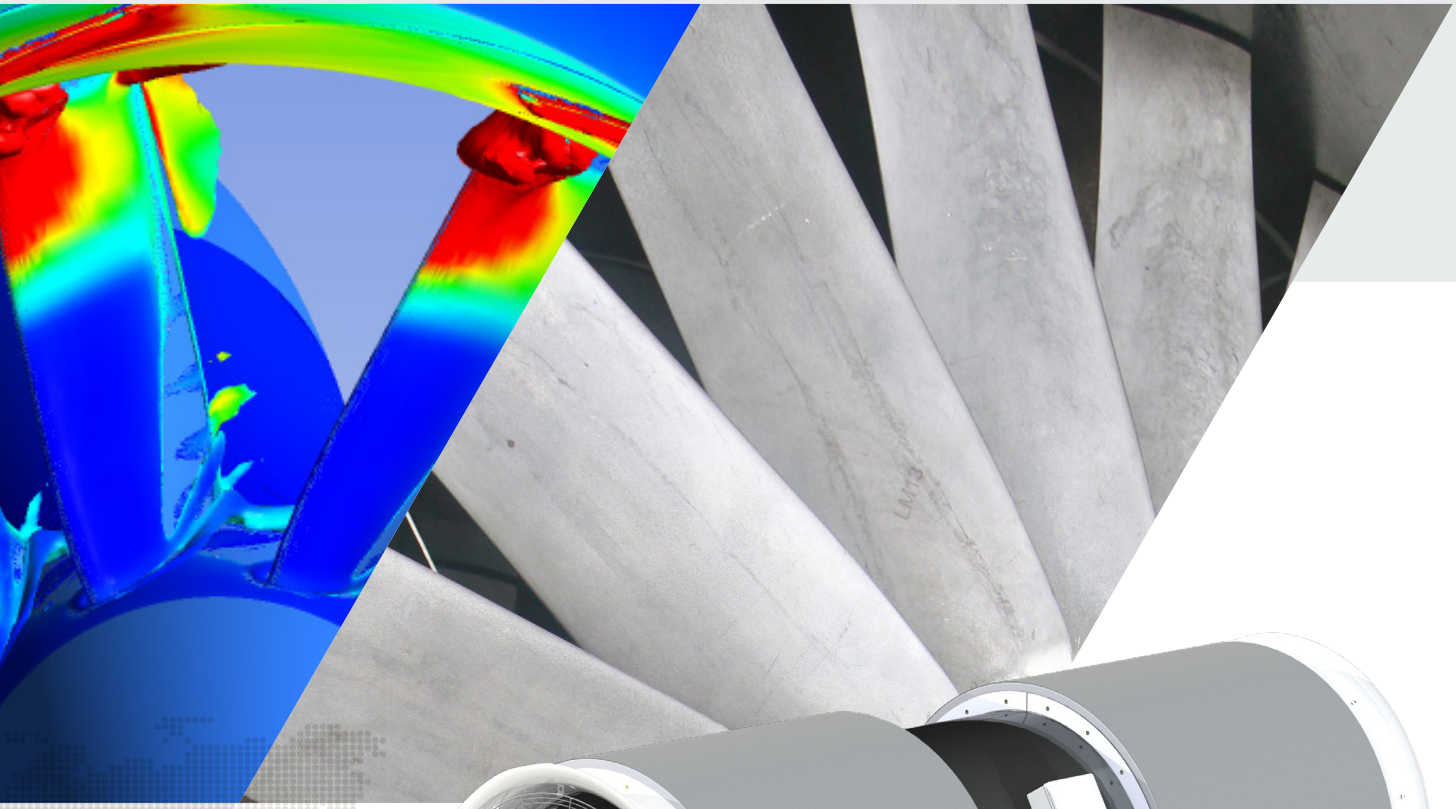

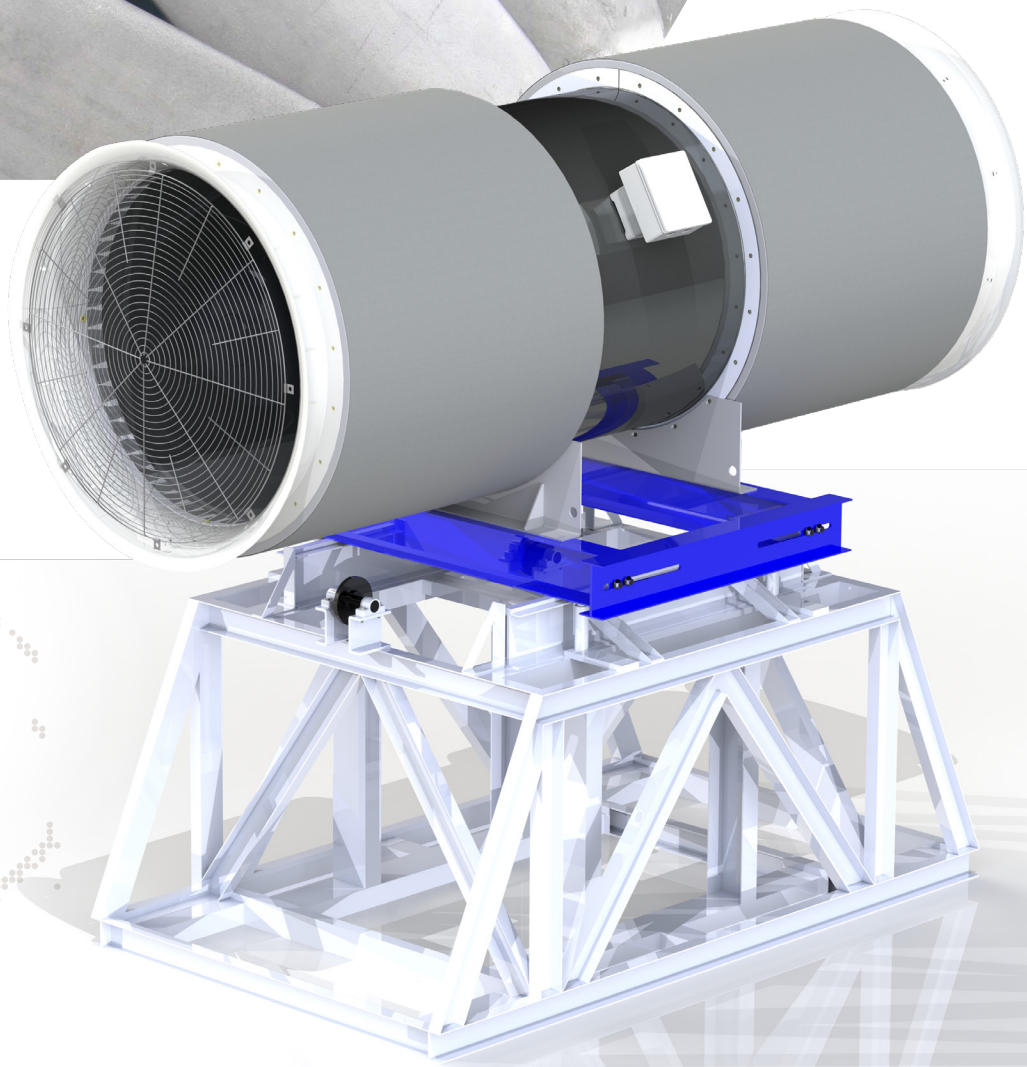

APPLICATION EXPERTISE AND SUPPORT SERVICES

1. TUNNEL VENTILATION DESIGN & CFD ANALYSIS

The FläktGroup SEMCO design team is focused on delivering the optimum design, tailored to local regulations, optimizing air quality, life safety, installed cost and full life cycle costs.

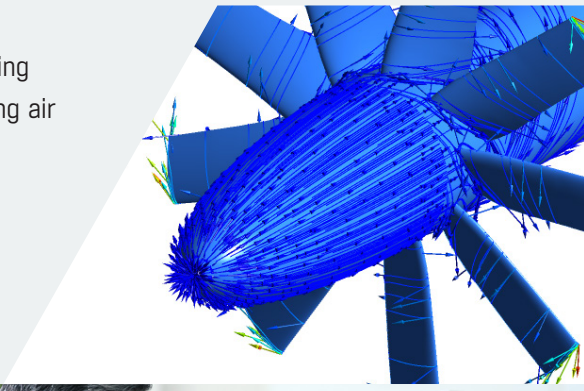

2. PRESSURE DROP CALCULATIONS & VALIDATION OF NOISE CALCULATIONS

Our engineering department is able to assist in making sure all calculations are correct and the products selected meet all requirements.

3. FACTORY ACCEPTANCE TESTING

Our dedicated lab conducts regular FAT's for our clients all over the world. Customers can inspect the factory and understand the manufacturing process so they can have complete confidence in our solution.

4. FAN INSTALLATION GUIDANCE & COMMISSIONING ASSISTANCE

Due to the made-to-order nature of tunnel ventilation design, we provide extensive support.

5. GLOBAL COVERAGE & SUPPORT SERVICE

As your local partners, FläktGroup SEMCO will work directly with you.

Road Tunnels

Road tunnels require ventilation to remove pollution and in case of a fire for the control of smoke.

Longitudinal ventilation is used where possible, as it gives the lowest installation and operating cost. The most common method is to use Jetfoil fans where the relatively high velocity discharge induces a flow of air through the tunnel. As the jet from the fan diffuses, it transfers energy to the tunnel airflow and creates an increase in static pressure, which causes air to flow as in any conventional system.

For free flowing traffic in one way tunnels the traffic induced airflow is normally sufficient to ventilate the tunnel even if the tunnel is designed with a fully or semi transverse system.

Large axial flow fans are used for transverse and semi transverse systems where the air is supplied or extracted through ducts from plant rooms. Normally several fans are used in parallel to provide steps in volume flow. Frequently the fans are VFD controlled to provide additional steps in ventilation, a lower operating cost at low levels of flow and low noise levels for night time operation. Often the fans are 100% reversible so that supply fans can also extract. To clear smoke from one side of a fire, reversible fans may be used with the duct system to create a longitudinal flow along the tunnel.

There can also be occasions where a longitudinal system using Jetfoils is justified in addition to a transverse system as the operating cost at low ventilation rates is much less. To avoid pollution at the openings of the tunnel, large fans may be used to capture the tunnel airflow and discharge it at a high level.

Metro & Underground Railways

Ventilation is required to remove the heat generated by the trains and other electrical equipment.

Virtually all of the electrical power consumed degenerates into heat which is removed by a combination of natural and powered ventilation. During free running conditions the piston effect of the trains may be sufficient for ventilation and natural ventilation may maintain this condition even when the trains are not operating. However, when the system becomes congested and trains are running at short intervals or, in the case of an incident, are stationary with minimum spacing, forced ventilation becomes necessary.

The amount of heat generated by trains in rapid transit systems of high density usage is the largest single factor in determining the mass flow of air required to maintain a stable air temperature. However the risk of fire must also be taken into account. Frequently VFD controlled fans are used with low speed for heat removal and high speed for fire smoke control.

Longitudinal ventilation along the tunnel is common using 100% reversible fans. For an enclosed system large fans connected to atmosphere would be used in a push-pull configuration. If the system is not enclosed Jetfoils can be used to induce the required airflow along the tunnel to and from atmosphere. Smoke is directed in the most favorable direction depending on the position of a fire in the train or tunnel. Fans are rated up to 750°F for 2 hours. Air movement in the stations follows normal ventilation practice as far as possible. For smoke control, supply and extract fans are used, reversible if a longitudinal system is being used. Smoke curtains can be used to create smoke reservoirs.

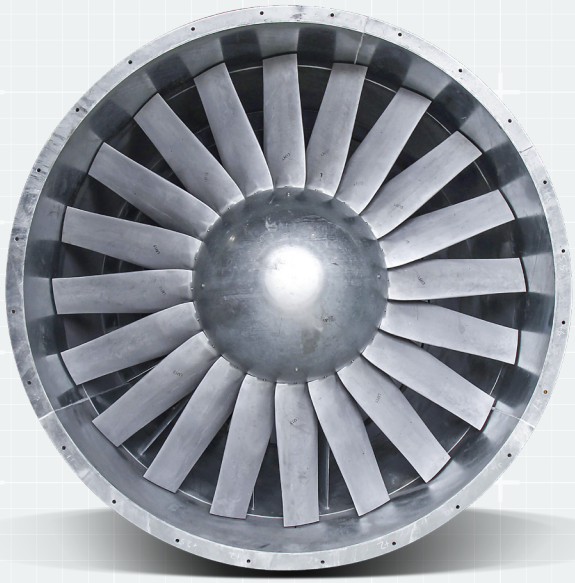

Tunnel ventilation – pollution control

Effective ventilation is an essential requirement for life support underground.

Toxic and inflammable gases must be diluted to a safe level; dust and smoke dispersed; excessive heat should be relieved; and escape routes must be kept clear from smoke. Pollution emitted by trains and road vehicles must be removed to provide an acceptable and safe environment. The heat from a train may need to be removed by forced ventilation to ensure that the temperature is acceptable to both people and equipment. Length of exposure and concentration of carbon monoxide are the important factors in the progressive effects of loss of alertness, headache and unconsciousness. Other products of car exhausts such as nitrogen and sulphur oxides can also have negative health effects of drivers.

As vehicles become cleaner and more efficient and alternative fuel sources become more common, the day to day ventilation requirement for tunnels will change meaning far more focus is required on the fire safety element of tunnel ventilation for the long term safety of users.

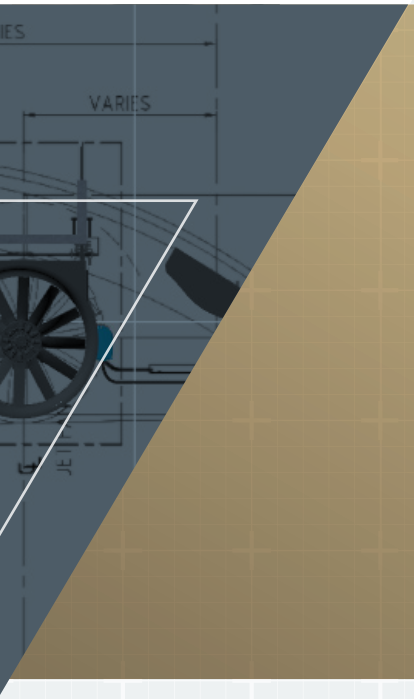

Life Safety

In the event of a fire; large axials and jet fans, or a combination of the two can be used clear smoke from the tunnel to aid in the safe evacuation of the tunnel. The controlling the direction and flow of smoke the ventilation system can also allow firefighters safe access to the fire in order to extinguish it. There are three main system types used for pollution control and fire safety:

Fully Transverse System

A fully transverse system supplies fresh air from a low level, normally from a duct underneath the roadway. The hot, polluted air rises and is extracted at a high level normally through a ducted system above the roadway.

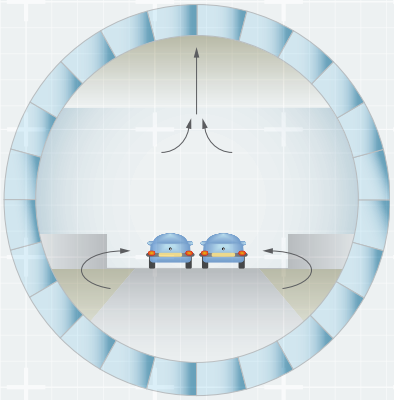

Semi-Transverse System

This system is similar to the fully transverse system in the supply and extraction of air and is used for long, congested two-way tunnels. Semi-transverse systems rely on longitudinal air movement along the tunnel and require a higher ventilation rate.

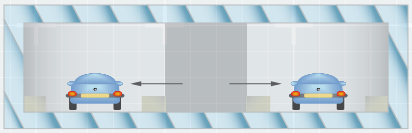

Longitudinal Ventilation Systems

The simplest solution for tunnels as air movement is created along the length of the tunnel by large fans, jet fans or a combination of the two. The air can enter at one portal and leave at another, or be supplied or extracted at points within the tunnel.

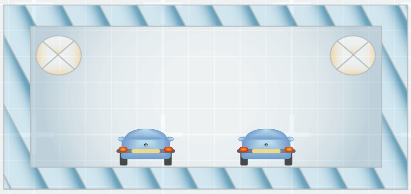

TUNNEL VENTILATION SYSTEM DESIGN & CFD

The earlier we are involved in a project, the more value we can add.

By becoming involved at the concept design stage for the ventilation system we are able optimize the fan selections and potentially have a positive effect on other costs within the project. This is particularly relevant for plant room layout and ventilation shaft specification and sizing. In addition to construction costs we also work with designers and contractors to ensure the installation process is simplified as much as possible. This helps us to mitigate risks and reduce installation costs. In order to optimize our solutions we also use advanced CFD modelling to unsure the system as a whole is effective at delivering the required performance.

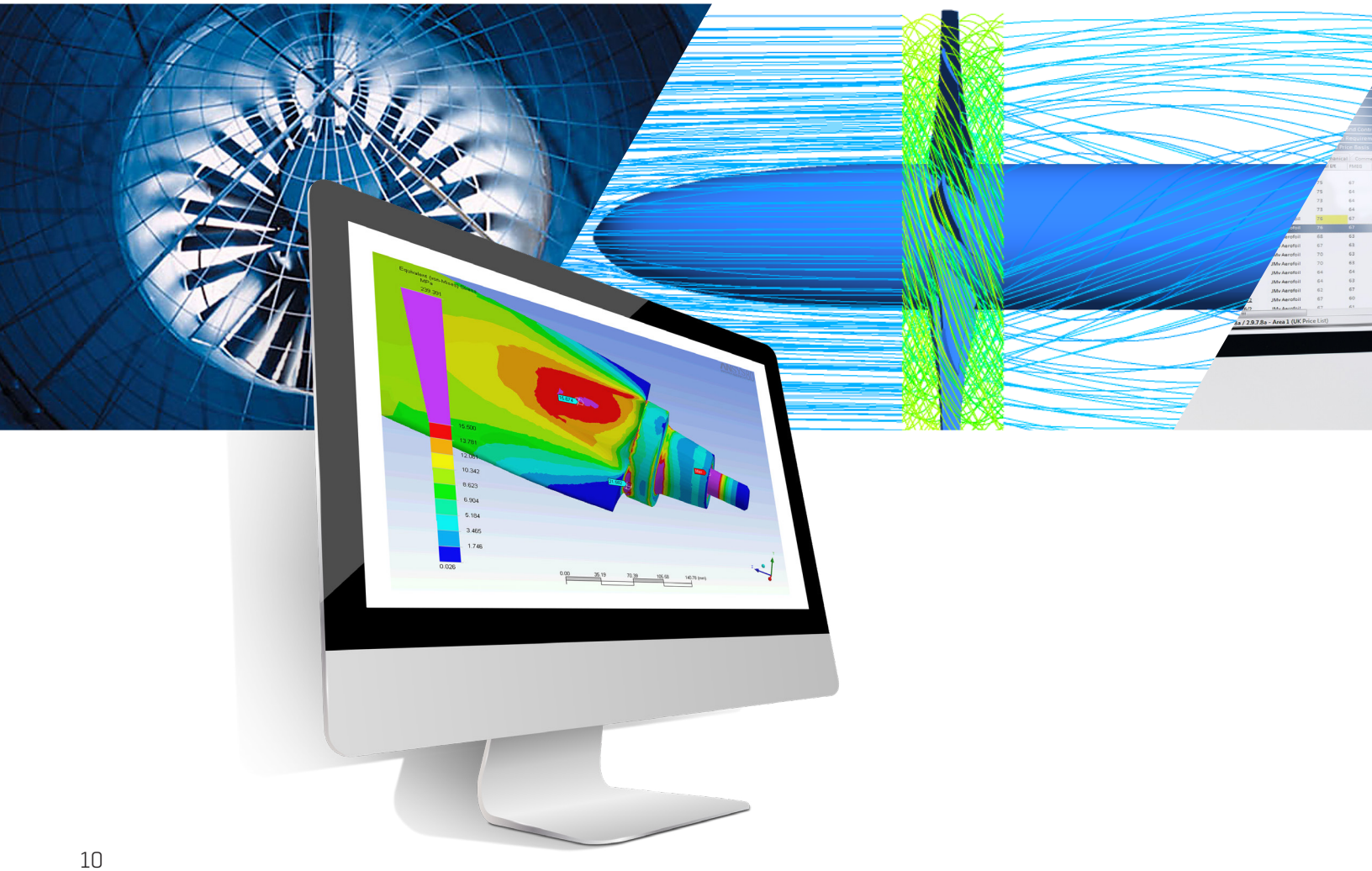

Verifying our products through simulation and in the lab.

Our Research & Development team uses a variety of advanced simulation tools to optimize product designs for aero performance, efficiency and sound levels. Once a concept is theoretically proven the design can be built and tested in our dedicated Laboratory.

LABORATORY CAPABILITIES

AERODYNAMIC:

- ISO 5801 (BS 848 Pt1)
- ISO13350 (BS848Pt10) Jet fan test

ACOUSTIC:

- ISO5136 (BS848Pt2) induct test systems
- ISO3745 (BS848Pt2) semi-anechoic room 24' W x 26' L x 11.5' H, minimum NR29
- ISO13350 (Jet fan) semi-reverberant environment 26' W x 65.6' L x 13' H
- Dual channel real time frequency analysis, general noise mapping in anechoic environment or with sound intensity, impeller noise traverses

HIGH TEMPERATURE:

- 750°F test system for fans up to 11.5', capable of thermal shock and fan reversal
- Test system operates with a data acquisition system, providing raw and processed data directly on to a PC

LARGE AXIAL FANS

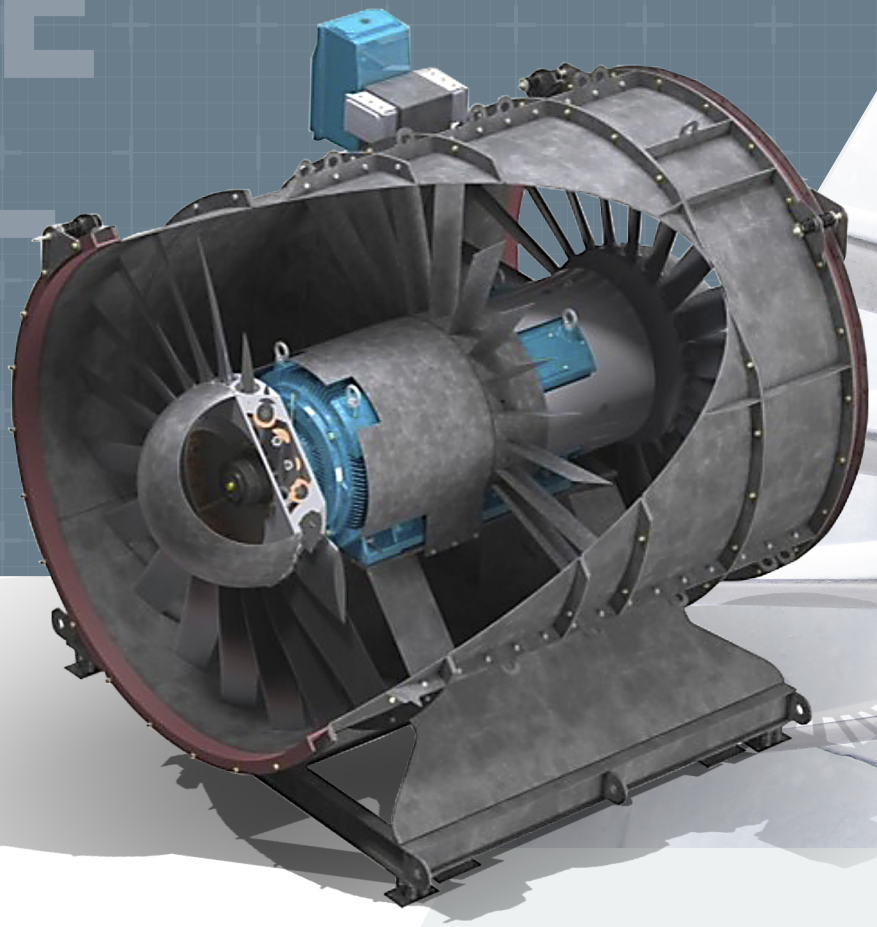

FläktGroup is the industry leader in air movement technology, providing innovative solutions worldwide. Our extensive knowledge of design and applications is based on over 100 years of experience in tunnels, buildings, industry and original equipment manufacturers. FläktGroup's global coverage reaches over 100 countries and is supported by an extensive distribution network.

LARGE JM HIGH TEMPERATURE FANS

- Size range 4.1 ft. to 11.6 ft.
- Guaranteed performance to ISO 5801
- Unidirectional or Truly Reversible blade
- Higher pressure twin impeller and 2 stage fans are available
- High Temperature certification for 392°F and 572°F categories up to 710 kW, and 752°F up to 1000 kW
- Static pressures up to 0.58 psi and volume flow up to 529,720 CFM
- Fans are tested up to 11.5' diameter, running at 1500 rpm, with a 1341 hp motor
- All cast rotating impeller components are examined by X-ray to ensure reliability in service
- IEC motors certified to EN 12101-3 and ISO 21927-3
- Steel parts hot dip galvanized or hot Zinc Sprayed (except hub)
- Manufacturer registered and assessed in accordance with BS EN ISO 9001
- Paint finish optional
- Accessories: guards, condition monitoring, anti vibration mounts, flexible connectors, bellmouth/ coned entries, diffusers, transition pieces, silencers, dampers, starters and controls

JETFOIL FANS

Our expertise in tunnel ventilation applications covers road and rail tunnels, metros, tunnel construction and wind tunnels. FläktGroup SEMCO products have been successfully used in underground projects throughout the world and our Jetfoil product range is unrivalled in its technology, innovation, efficiency and thrust.

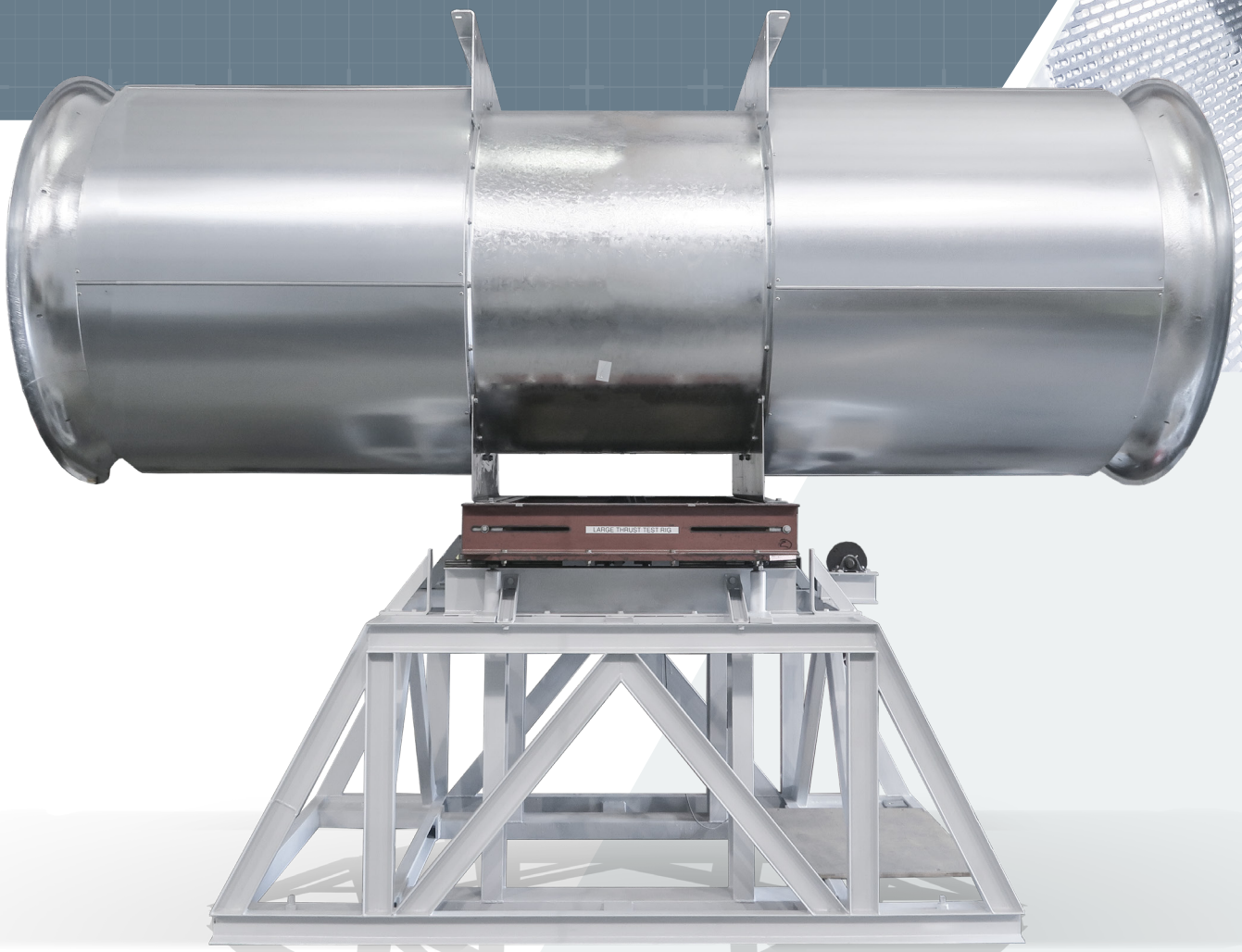

JETFOIL FANS

- 22” - 63” diameter
- Thrust up to 86 pounds
- 31.5” up to 1800 rpm, 9.2” up to 1800 rpm and 63” up to 1200 rpm
- Fully adjustable die cast aluminium impellers in uni-directional and truly reversible configurations; and 100% X-ray of all cast impeller components
- Mild steel casing - hot dipped galvanized after manufacture, painted or all stainless steel construction
- Silencers fitted where required
- Motor protection IP55 minimum
- IEC motors certified to EN 12101-3
- Emergency ventilation options up to 750°F/2 hours
- Truly reversible fans provide approximatey equal thrust and airflow in forward and reverse directions
- Noise Levels: acoustic analysis and attenuators to ensure the fans are In accordance with environmental requirements and local regulations is available
- Applications; longitudinal ventilation of road tunnels, mine ventilation, emergency ventilation - smoke control, hangar/large area ventilation

72nd Street Station
New York City Subway

The Metropolitan Transit Authority (MTA) in New York City averaged 5.5 million passengers each weekday in 2017. The 72nd Street Station is among MTA's network of 472 stations - making the New York City subway system the largest in the world. Laid end-to-end, subway system's 665+ mainline track miles would stretch from New York City to Chicago!

PROJECT

- New underground station is part of the MTA's Second Avenue Subway Program, the first major expansion of New York City's subway system in more than 50 years.

NEED

- Major projects included installation of a ventilation system including fan and chiller plants within the station and its ancillary structures

SOLUTION

- (8) 250hp JM Aerofoil Class F200 Fans

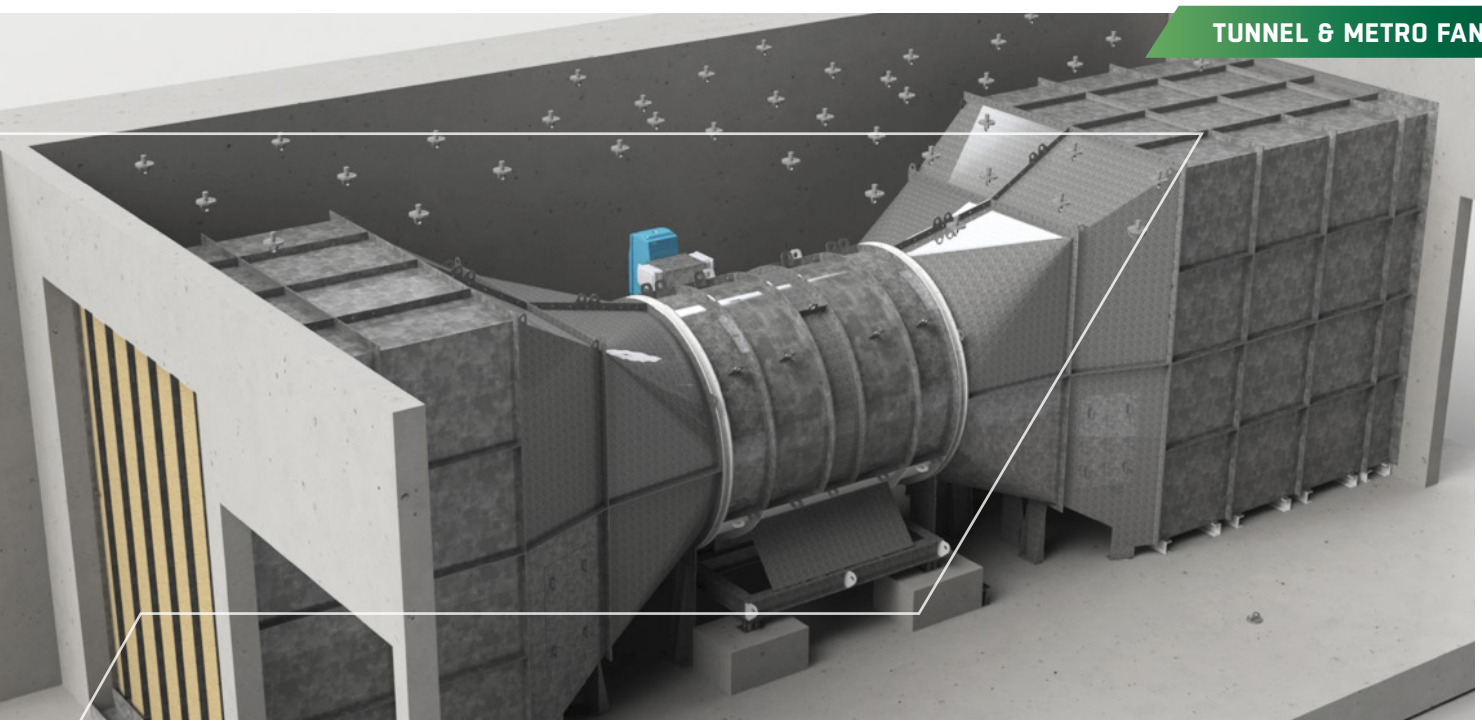

Marmaray, Turkey
Railway tunnel project

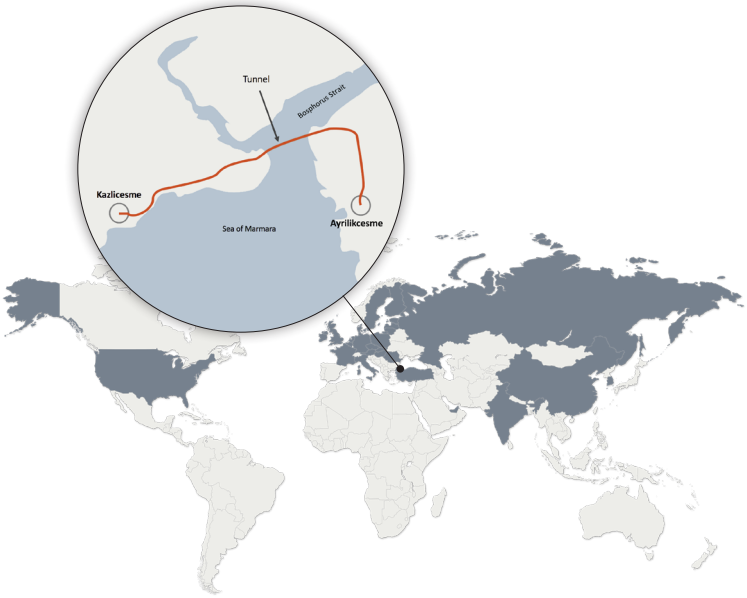

Stretching for over 8.5 miles across Istanbul and under the Bosphorus Strait, the tunnel is the only one in the world connecting two continents and has been designed to develop important trading routes in the region. The rail service will be capable of carrying 75,000 people per hour in either direction. The tunnel ventilation fans consist of 30 double impeller fans with diameters of over 8 feet, as well as 18 single impeller units with diameters of 5.25 feet.

PROJECT

- The Marmaray project has upgraded existing suburban train lines to create a direct link joining the southern part of the city across the Bosphorus Strait.

NEED

- Istanbul is one of the world's biggest cities, with over 16 million people. Some two million, according to the AFP news agency, cross the Bosphorus every day via just two bridges, causing severe traffic congestion.

SOLUTION

- (30) 8 ft. diameter fans
- (18) 5.25 ft. diameter fans
- (9) Jet Fans

A selection of our Tunnel & Metro projects worldwide

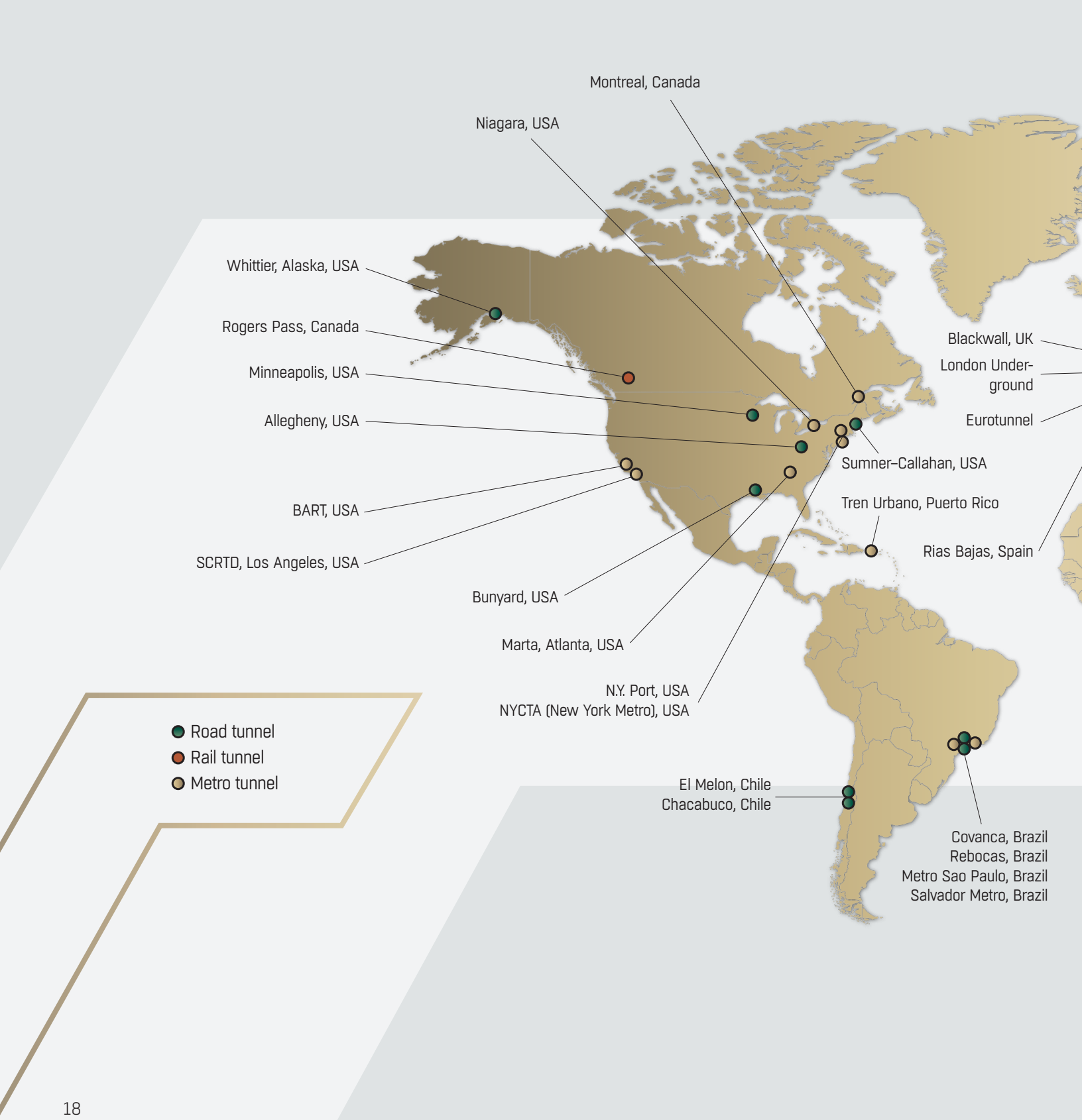

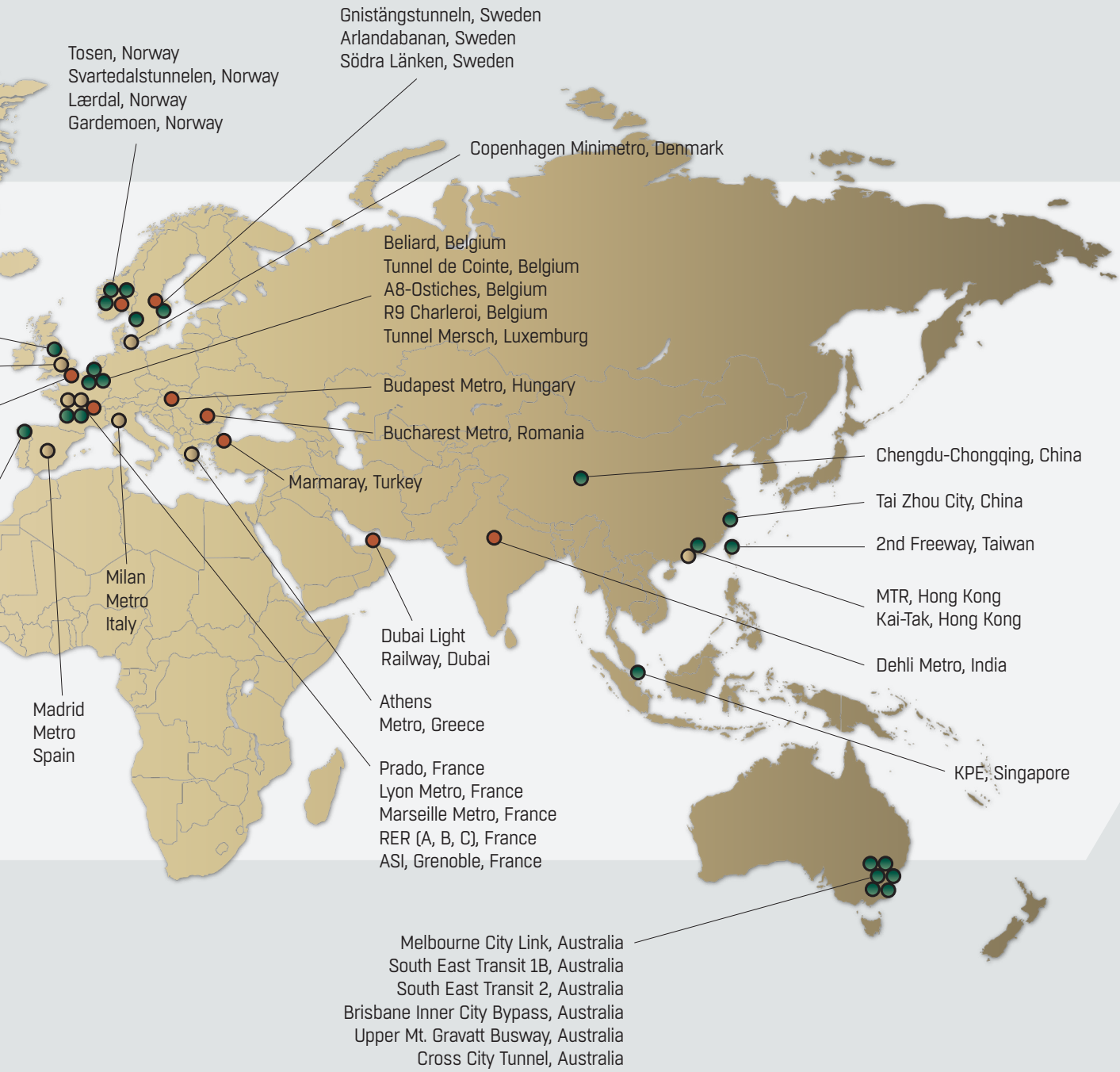
Gnistängstunneln, Sweden
Arlandabanan, Sweden
Södra Länken, Sweden
Tosen, Norway
Svartedalstunnelen, Norway
Lærdal, Norway
Gardemoen, Norway
Copenhagen Minimetro, Denmark
Beliard, Belgium
Tunnel de Cointe, Belgium
A8-Ostiches, Belgium
R9 Charleroi, Belgium
Tunnel Mersch, Luxemburg
Budapest Metro, Hungary
Bucharest Metro, Romania
Chengdu-Chongqing, China
Marmaray, Turkey
Tai Zhou City, China
2nd Freeway, Taiwan
Milan
Metro
Italy
MTR, Hong Kong
Kai-Tak, Hong Kong
Dubai Light
Railway, Dubai
Dehli Metro, India
Madrid
Metro
Spain
Athens
Metro, Greece
KPE, Singapore
Prado, France
Lyon Metro, France
Marseille Metro, France
RER (A, B, C), France
ASI, Grenoble, France
Melbourne City Link, Australia
South East Transit 1B, Australia
South East Transit 2, Australia
Brisbane Inner City Bypass, Australia
Upper Mt. Gravatt Busway, Australia
Cross City Tunnel, Australia

FläktGroup
SEMCO

EXCELLENCE IN SOLUTIONS

FläktGroup SEMCO delivers smart and energy efficient Air Distribution and Air Quality solutions to support every application area. We offer our customers innovative technologies, high quality and outstanding performance supported by more than fifty years of accumulated industry experience. The widest product range in the market, and strong market presence in 65 countries worldwide, guarantee that we are always by your side, ready to deliver Excellence in Solutions.

FläktGroup SEMCO
Corporate Headquarters
1800 East Pointe Drive
Columbia, Missouri 65201 USA
573.443.1481
sales.semco@flaktgroup.com

U.S. GREEN BUILDING COUNCIL MEMBER

To learn more about FläktGroup SEMCO offerings and to contact your nearest representative please visit
www.semcohvac.com